Round 2 - Friday, April 29, 2022

SHOTLINK

Huntsville Championship

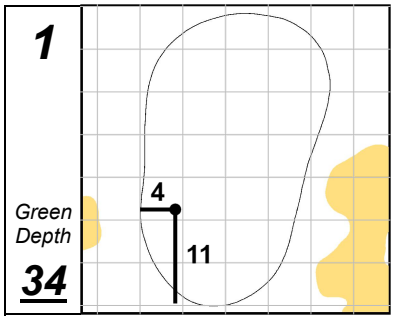

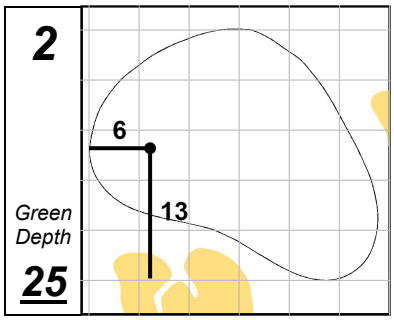

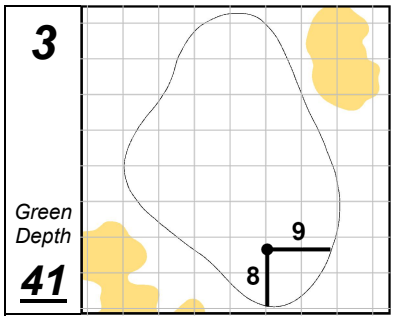

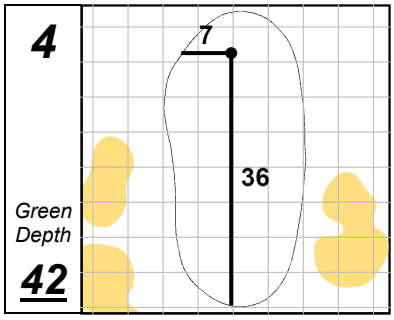

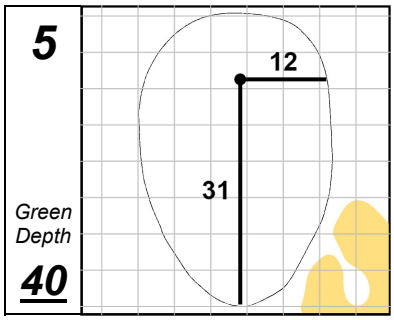

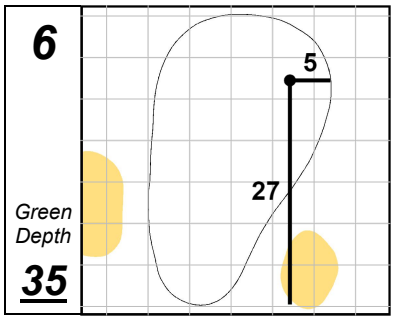

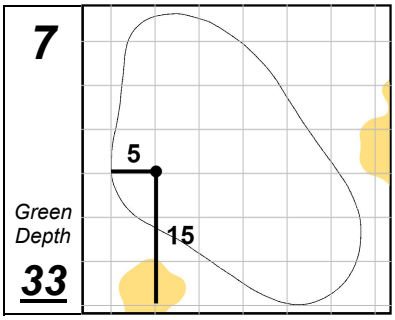

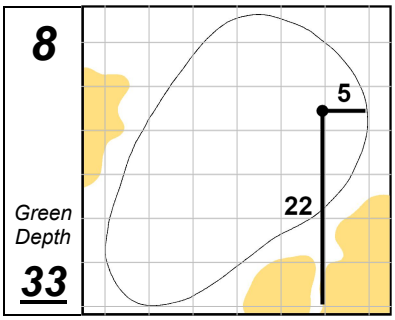

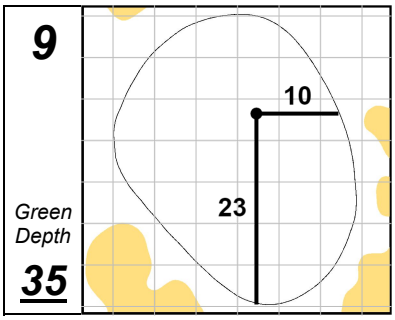

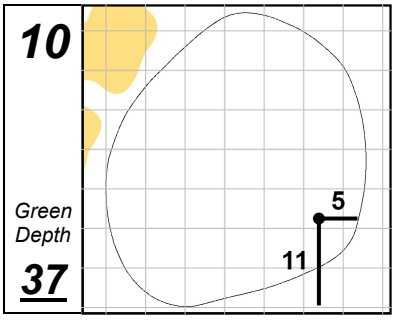

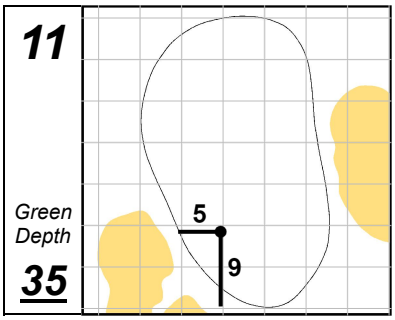

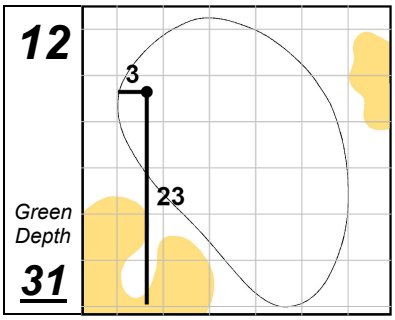

The Ledges

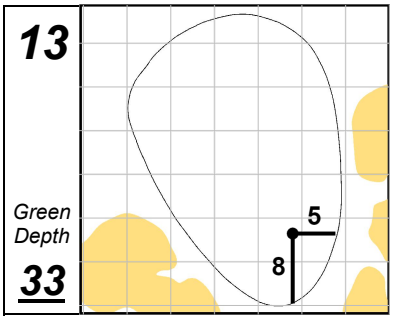

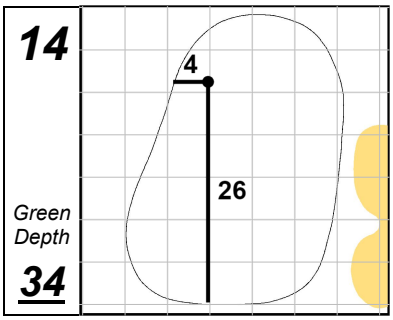

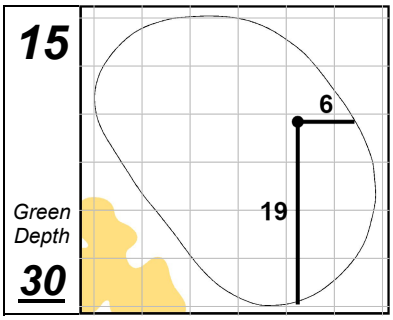

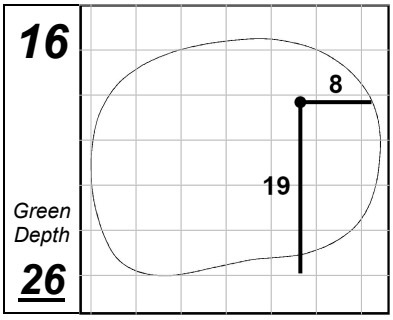

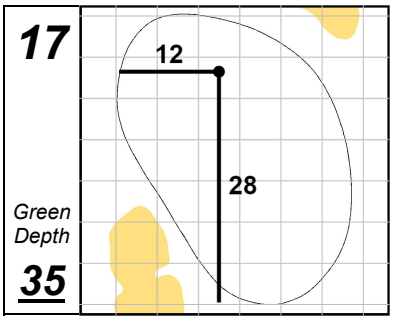

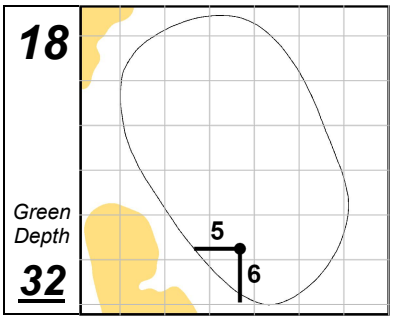

Each side of a complete square on the green represents 5 YARDS.

Thursday, April 28, 2022 10:16:44 AM